DC Planet Gear Motor

Item No.: 00101

6v 12V18V 24v 200W-DC Planet Gear Motor 350kg.cm High Torque Mini Metal Geared Motor for DIY Robot Rotating Table Door Lock Curtain Machine

Request Quote Contact Us

Description

With PDFmyURL you can easily save entire websites as PDF and use our API service to create PDFs automatically from webpages or HTML.

PDFmyURL

DC Planet Gear Motor

Model	DC90	DC350	DC550
Rated voltage	18V	18V	18V
Voltage range	6-22V	6-22V	6-22V
Max. current	25A	25A	25A
Max. torque	90KG.CM	350KG.CM	550KG.CM
Reducer ratio	i=36	i=151.4	i=216
Net weight	428G	428G	428G

3 level of Planetary gears train

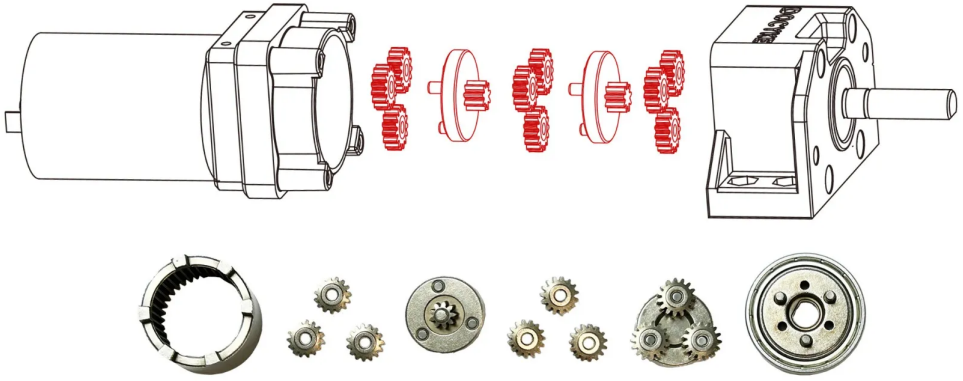

With PDFmyURL you can easily save entire websites as PDF and use our API service to create PDFs automatically from webpages or HTML.

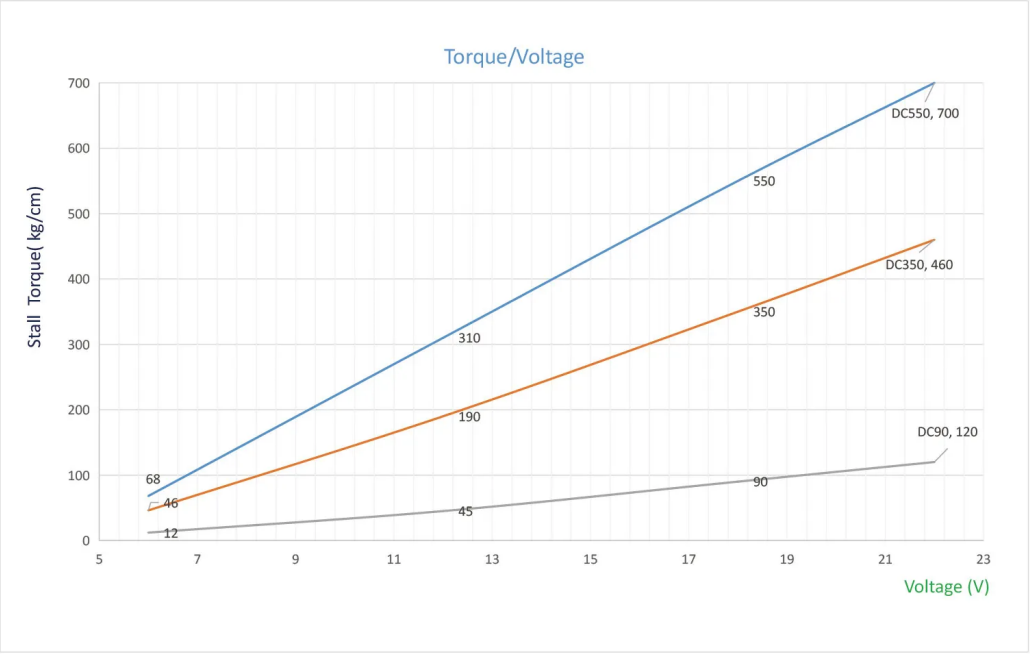

With PDFmyURL you can easily save entire websites as PDF and use our API service to create PDFs automatically from webpages or HTML.

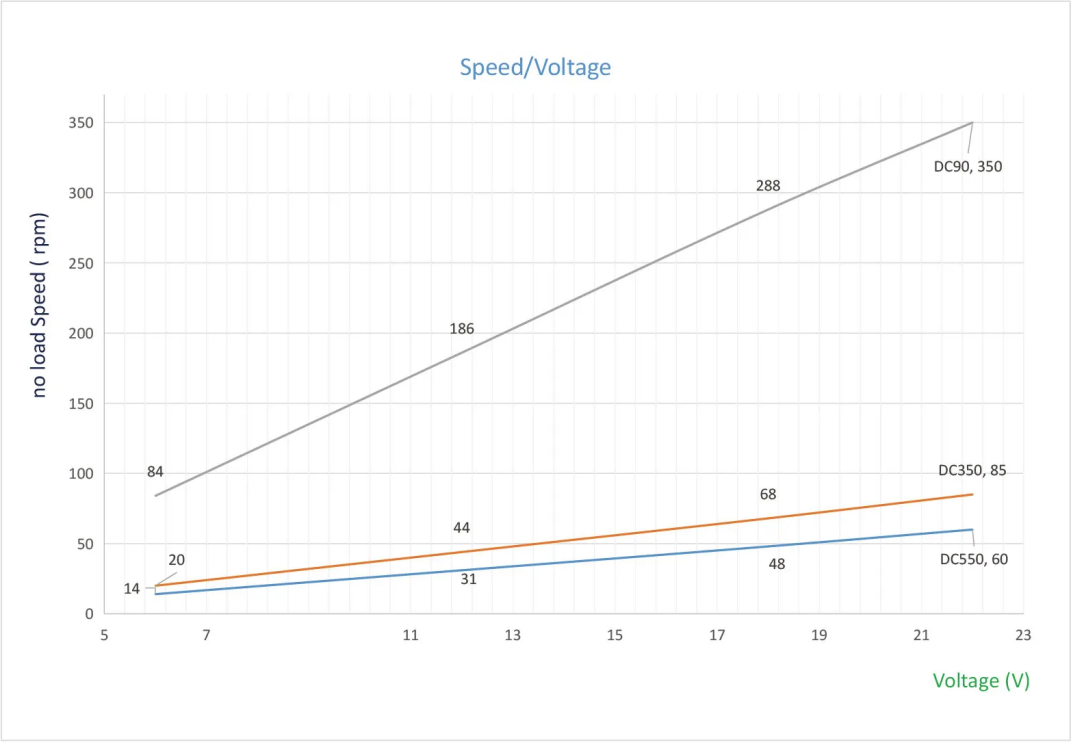

With PDFmyURL you can easily save entire websites as PDF and use our API service to create PDFs automatically from webpages or HTML.

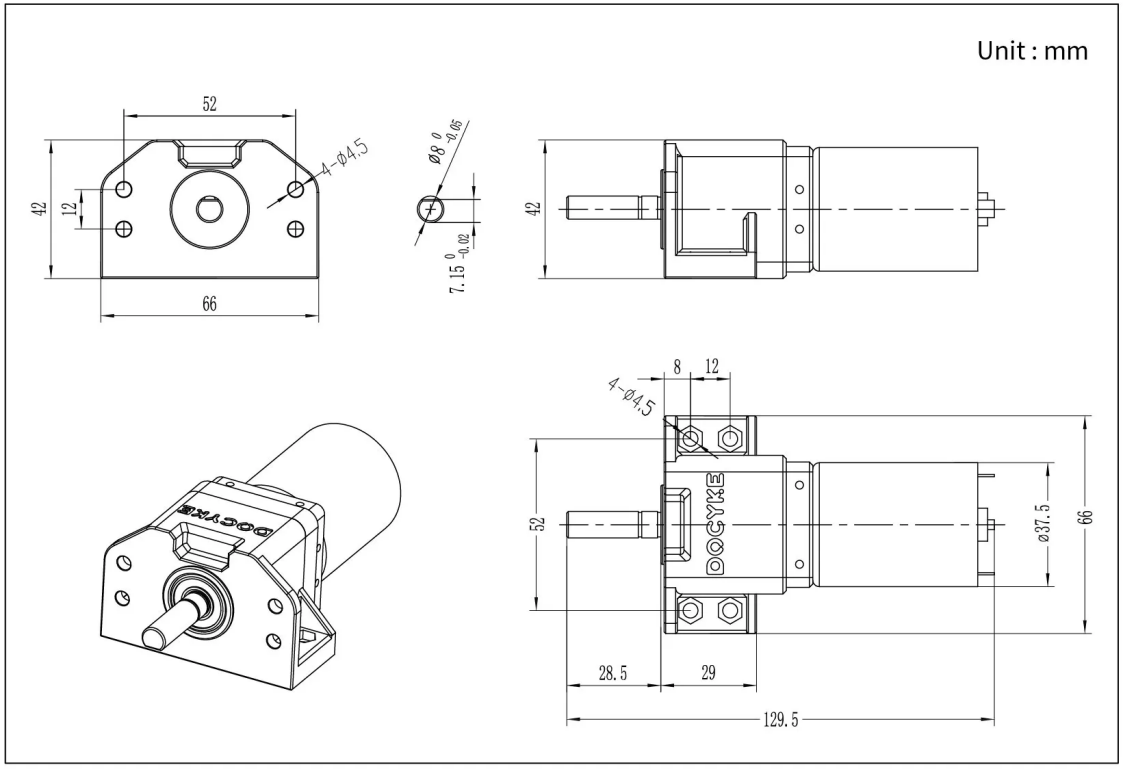

Send your message to us

Last Name

Email

* Country

Bouvet Island

* Subject

* Verification code

Submit

With PDFmyURL you can easily save entire websites as PDF and use our API service to create PDFs automatically from webpages or HTML.

PDFmyURL

DOCYKE TECHNOLOGY CO., LTD

Buliding 2, Science & Tech Park, No. 21 Caojiang Road, Yuecheng District, 312000, Shaoxing City, Zhejiang Province, China

Your Email Address

E-mail: do@docyke.com

PRODUCTS

- Modular Kit
- Servo Motor
- Electric Surfboard
- R & D

ABOUT US

- About Us

CONTACT US

- feedback

DOCYKE 2015-2025 © All Rights Reserved.

With PDFmyURL you can easily save entire websites as PDF and use our API service to create PDFs automatically from webpages or HTML.